WWW.CORALLY.COM
TEAM CORALLY
WORLD CHAMPIONS

Engineered to be the fastest

TOROX 185

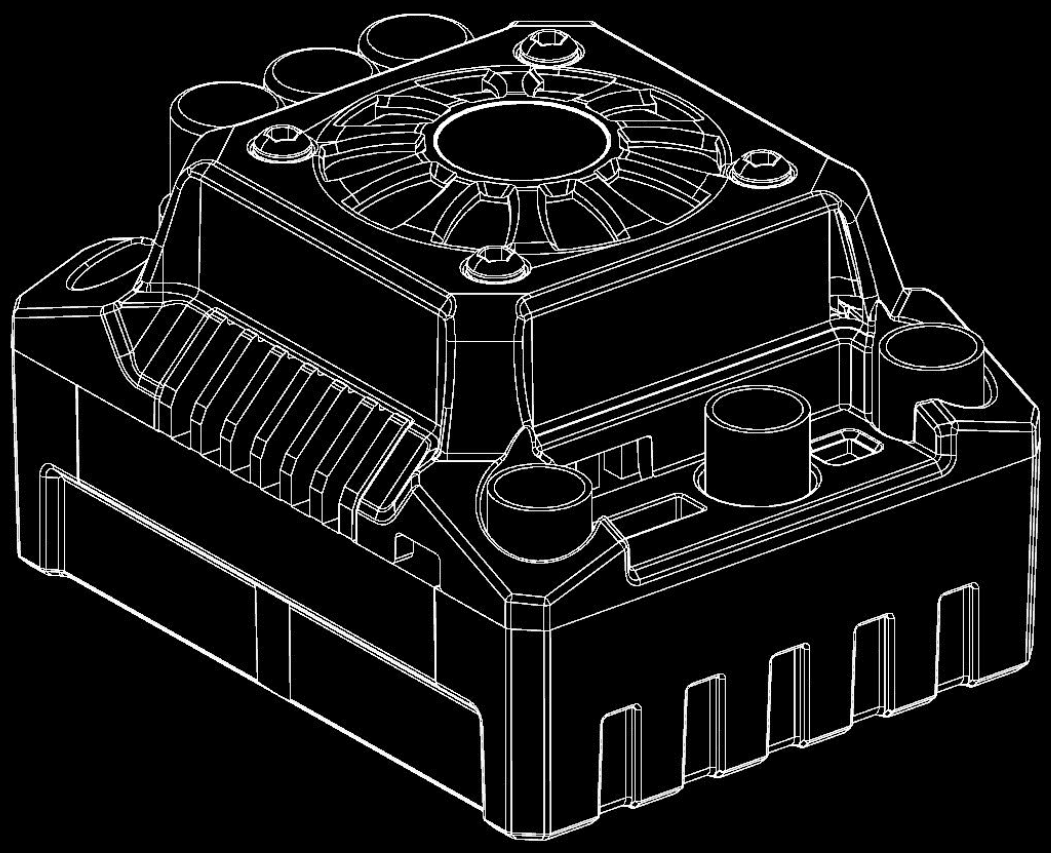

INSTRUCTION MANUAL

www.corally.com

#C-54011
Version 2

WARNINGS

- Make sure that all wires and connections are properly insulated before connecting the ESC to the motor and battery. A short circuit can cause irreparable damage to the ESC.
- Make sure all devices are properly connected, a poor connection can result in loss of vehicle control or damage to the ESC.
- Read the manuals of all power supplies and make sure that the power supply configuration is correct before using this ESC.
- Please use a soldering iron with a power of at least 60W to solder all inputs/outputs cables with connectors.
- Do not hold the vehicle in the air or start it at full throttle, as rubber tires can «expand» to an extreme size and even crack and cause serious injury.
- Stop using the ESC when the temperature of its housing exceeds 90°C/194°F, otherwise the ESC will be destroyed and your engine may be damaged. We recommend setting the «ESC Thermal Protection» to 105°C/221°F (this is the internal temperature of the ESC).
- Please remove the ESC cooling fan before exposing the vehicle to liquids and dry it completely immediately after use.
- Always disconnect the batteries after use, as the ESC will always consume power if connected to the battery (even if the ESC is off). A long-lasting contact will cause the battery to completely discharge and damage it. This will NOT be covered by the warranty.

SPECIFICATIONS

Cont./Peak Current	185A / 1050A
Motor Type	Sensorless/Sensored Brushless Motor(only in sensorless mode)
Applications	1/8th Buggy, Truggy, Truck and On-road
Motor Limit	Brushless Motor Limit with 6S LiPo / 18 Cell NiMH: KV≤1500 (5892 size motor) Brushless Motor Limit with 8S LiPo / 24 Cell NiMH: KV≤1200 (5892 size motor)
LiPo /NiMH Cells	3-8S LiPo / 9-24 Cell NiMH
BEC Output	6V/7.4V Switchable, Continuous Current of 6A (Switch-mode)
Cooling Fan	Powered by the stable BEC voltage of 6V/7.4V
Connectors	Input End: No Connectors Output End: 6.5mm Female Gold Connectors (pre-soldered onto the PCB of the ESC)
Size/Weight	70 x 56 x 45.5mm / 240g
Programming Port	FAN/PRG Port

CONNECTIONS

Please observe the connection diagram !

DO NOT reverse the polarity

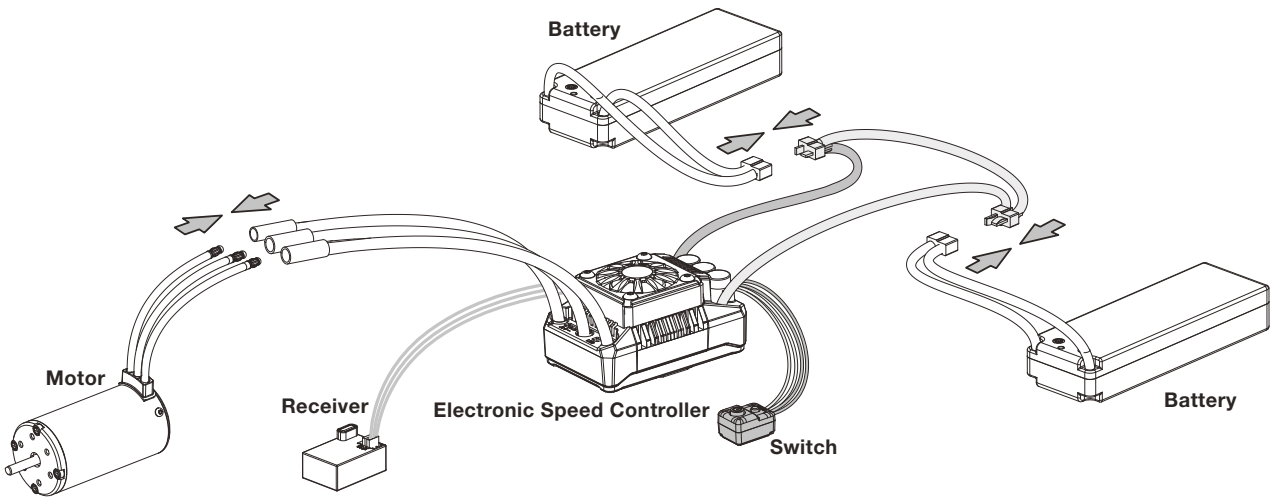

CONNECTIONS

Motor Wiring
There is no polarity on the A/B/C motor wires. Connect the wires to the motor and ESC. If the motor runs in reverse, reverse 2 cables to the motor.

Receiver Wiring
Plug the ESC cable to the Throttle Channel (TH/2) of the receiver.
Plug the steering servo cable to the Steering Channel (ST/1) of the receiver.

Battery Wiring
Connect the ESC power cables to the battery, making sure that the polarity is correct.
Connect the Positive (**+**) RED cable to the Positive (**+**) connector of the battery.
Connect the Negative (**-**) BLACK cable to the Negative (**-**) connector of the battery.

If you reverse the polarities on the battery, the ESC will be immediately damaged and cannot be repaired.
This is not covered by the warranty.

RADIO CALIBRATION

Begin using your ESC by calibrating with your transmitter. We strongly recommend to use the “Fail Safe” function on the radio system and set (F/S) to “Output OFF” or “Neutral Position”. Example of calibrating Neutral range and Endpoint.

1. Turn ON the transmitter, ensure all parameters (D/R, Curve, ATL) on the throttle channel are at default (100%). For transmitter without LCD, please turn the knob to the maximum and the throttle “TRIM” to 0. Please also turn the corresponding knob to the neutral position. For FutabaTM transmitter, the direction of throttle channel shall be set to “REV”, while other radio systems shall be set to “NOR”. Please ensure the “ABS / braking function” of your transmitter must be DISABLED.

2. Start by turning ON the transmitter with the ESC turned OFF but connected to a battery. Holding the SET button and press the ON/OFF button, the RED LED on the ESC starts to flash (*Note 1 the motor beeps at the same time*), and then release the SET button immediately. (*The ESC will enter the programming mode if the SET button is not released in 3 seconds, please restart from step 1.*)

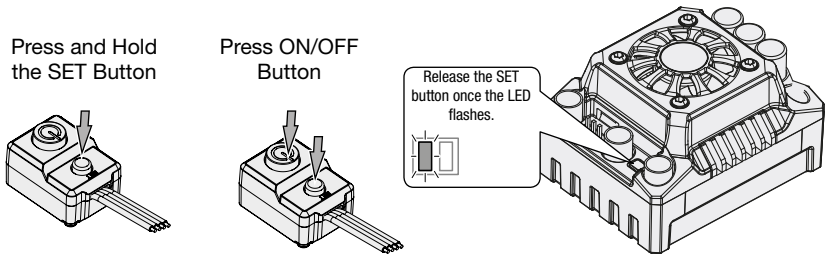

Note 1: Beeps from the motor may be low sometimes, and you can check the LED status instead.

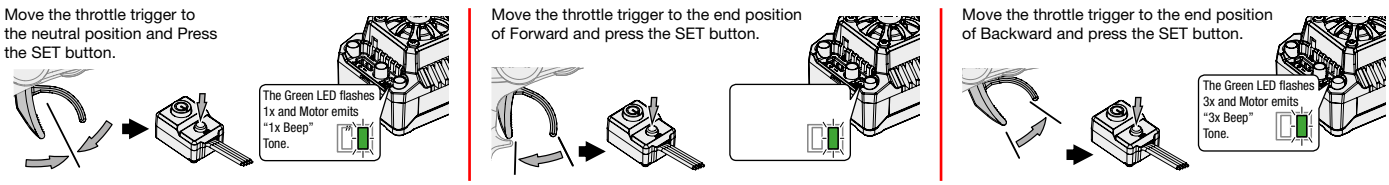

3. Set the neutral point, the full throttle endpoint and the full brake endpoint.
- Leave the throttle trigger at the neutral position, press the SET button, the RED LED dies out and the GREEN LED flashes 1 time and the motor beeps 1 time to accept the neutral position.
- Pull the throttle trigger to the full throttle position, press the SET button, the GREEN LED blinks 2 times and the motor beeps 2 times to accept the full throttle endpoint.
- Push the throttle trigger to the full brake position, press the SET button, the GREEN LED blinks 3 times and the motor beeps 3 times to accept the full brake endpoint.

4. The motor can be started 3 seconds after the ESC/Radio calibration is complete.

POWER ON/OFF WARNING FUNCTION

1. Power ON/OFF:
Start with the ESC turned OFF ; Press the ON/OFF button to turn ON the ESC;
Start with the ESC turned ON ; Press and hold the ON/OFF button to turn OFF the ESC.

2. Warning Tones:
Turn ON the ESC (that is to turn it ON without holding the SET button); the motor will beep the number of LiPo cells you have plugged in. For example, 2 beeps indicate a 2S LiPo battery, 3 beeps indicate a 3S LiPo battery.

POWER ON/OFF WARNING FUNCTION

Programmable Items	Parameter Values								
Basic Setting	Option 1	Option 2	Option 3	Option 4	Option 5	Option 6	Option 7	Option 8	Option 9
1.Running Mode	Fwd/Br	Fwd/Rev/Br							
2. LiPo Cells	Auto Calculation	2S	3S	4S	6S	8S			
3. Cutoff Voltage	Disabled	Auto (Low)	Auto (Intermediate)	Auto (High)					
4. ESC Thermal Protection	105°C/221°F	125°C/257°F							
5. Motor Thermal Protection	Disabled	105°C/221°F	125°C/257°F						
6. Motor Rotation	CCW	CW							
7. BEC Voltage	6.0V	7.4V							
8. Brake Force	12.5%	25%	37.5%	50%	62.5%	75%	87.5%	100%	Disabled
9. Reverse Force	25%	50%							
10. Start Mode (Punch)	Level 1	Level 2	Level 3	Level 4	Level 5				
Advanced Setting									
11. Drag Brake	0%	2%	4%	6%	8%	10%	12%	14%	16%

1. RUNNING MODE

Option 1: Forward + Brake
It has forward and brake functions only, no reverse and this is usually a racing mode.

Option 2: Forward + Reverse + Brake
This mode can be used as for training and it has “Forward/ Reverse with Brake” mode. This ESC uses the “DOUBLE CLICK” method, i.e. the first time you push the throttle/brake trigger forward to the brake/reverse position the vehicle only brakes. Only when the vehicle has stopped and the engine is no longer turning is it possible to reverse the vehicle by pressing the throttle/brake trigger again. The reverse function will not work if your car does not come to a complete stop. The vehicle only reverses after the motor stops. This method is for preventing vehicle from being accidentally reversed.

2. LIPO CELLS

We recommend to set this function manually instead of the “Auto Calc“ default setting. (which means calculating the LiPo cells a utomatically)”. The ESC can only identify 3S, 4S, 6S and 8S LiPo packs when setting this item to “Auto Calc.”. After you power ON the ESC, if the battery voltage is below 13.6V, it will be identified as a 3S, if the voltage is from 13.6V to 17.6V, it will be identified as a 4S, if the voltage is from 17.6V to 26.5V, it will be identified as a 6S, if the voltage is above 26.5V , it will be identified as a 8S.

Please note :
This ESC doesn’t work with 2S LiPo battery.
If you use a NiMH pack or a 5S/7S LiPo you need to set “**LiPo Cells** to **Auto Calc**.” and “**Cutoff Voltage** to **Disabled**”

3. CUTOFF VOLTAGE

Sets the voltage at which the ESC lowers or removes power to the motor in order to either keep the battery at a safe minimum voltage (for LiPo batteries). The ESC monitors the battery voltage all the time, it will immediately reduce the power to 50% and cut off the output 10 seconds later when the voltage goes below the cutoff threshold. The RED LED will flash a short, single flash that repeats (☆☆☆) to indicate the low-voltage cutoff protection is activated. Please set the “Cutoff Voltage” to “Disabled” if you are using NiMH batteries.

Option 1: Disabled
The ESC does not cut the power off due to low voltage. We do not recommend using this option when you use any LiPo battery as you will irreversibly damage the product. You need to select this option when you are using a NiMH pack.

Option 2: Auto (Low)
Low cutoff voltage, difficulty to get the LVC Protection activated, is applicable to batteries with poor discharge capability.

Option 3: Auto (Intermediate)
Medium cutoff voltage, prone to getting the LVC Protection activated, is applicable to batteries with ordinary discharge capability.

Option 4: Auto (High)
High cutoff voltage, very prone to getting the LVC Protection activated, is applicable to packs with great discharge capability.

Warning: If you set the Cutoff Voltage to Disabled when you use a LiPo pack, then please pay attention to the power change of your vehicle. In general, the battery voltage gets pretty low when your vehicle is severely losing power, then you should stop using that pack.

4. ESC THERMAL PROTECTION

The ESC will automatically cut off the output with the GREEN LED flashes (☆☆☆) when the temperature gets up to the value you've previously preset and activates the ESC Thermal Protection. The output will not resume until the temperature gets down.

5. MOTOR THERMAL PROTECTION

This item has been permanently set to "Disabled".

6. MOTOR ROTATION

Pull the throttle trigger with the motor shaft facing you, the motor spins counter clockwise. When this item is set to CCW; the motor spins clockwise. When it is set to CW. The (A/B/C) wiring order of motors from different manufacturers may vary, so do the direction of the motor rotations. You can adjust the "Motor Rotation" or swap any two (ESC-to-motor) wires if the motor runs in reverse.

7. BEC VOLTAGE:

Setting 6.0V
It's applicable to ordinary servos. Do not use this option with high voltage servos; otherwise your servos may not function normally due to insufficient voltage.

Setting 7.4V
It's applicable to high voltage servos. Do not use this option with ordinary servos; otherwise your servos may be burnt due to high voltage.

8. BRAKE FORCE

The ESC provides proportional braking function; the braking effect is decided by the position of the throttle trigger. It sets the percentage of available braking power when full brake is applied. Large amount will shorten the braking time but it may damage your pinion and spur. Please select the most suitable brake amount as per your car condition and your preference.

9. REVERSE FORCE

Different reverse amount will bring different reversing speed. For the safety of your vehicle, we recommend using a low amount.

10. START MODE / PUNCH

You can choose the punch from level 1 (very soft) to level 5 (very aggressive) as per the track, tires, grip, conditions. This feature is very useful for preventing tires from wheel-spinning during the warm-up process. In addition, "level 4" and "level 5" have strict requirement on battery's discharge capability. It may affect the starting-up if the battery discharges poorly and cannot provide large current in a short time. If the car stutters or suddenly loses power in the starting-up process, indicates that the battery's discharge capability is poor, you might need to reduce the punch or increase the FDR (Final Drive Ratio).

11. DRAG BRAKE

Drag brake is the braking power produced when releasing from full speed to neutral zone. This is to simulate the slight braking effect of a neutral brushed motor while coasting.

(Attention! Drag brake will consume much power, so apply it cautiously.)

ESC PROGRAMMING

1. Programming The ESC With The Set Button

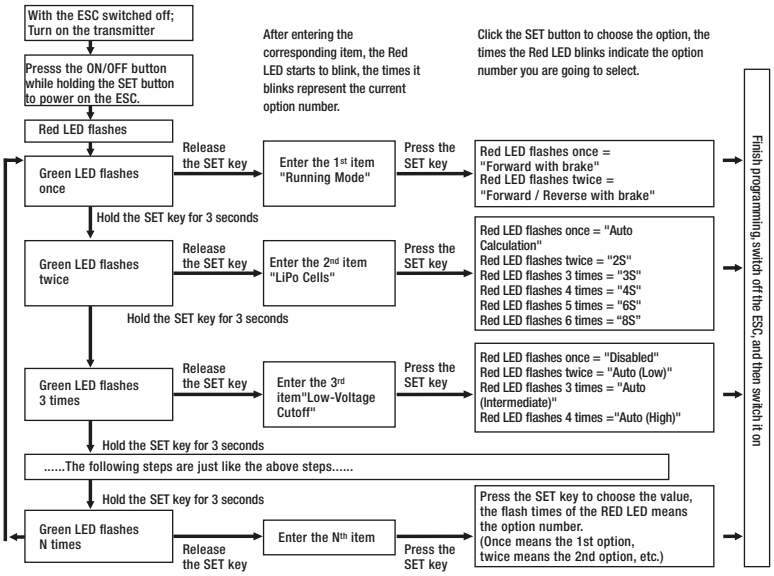

PLEASE NOTE :

- For easy recognition, the motor beeps at the same time when the GREEN LED flashes.
- When “N” (the number) is equal to or bigger than 5, we use a long flash to represent “5”. For example, the GREEN LED flashes a long flash (and the motor beeps a long beep at the same time) indicating you are in the 5th programmable item; if the GREEN flashes a long flash and a short flash (and the motor beeps a long beep and a short beep at the same time) indicating you are in the 6th programmable item; a long flash and two short flashes (a long beep and two short beeps at the same time) indicating you’re in the 7th programmable item and so on.

FACTORY RESET

- Restore the default values with the SET button
  Press and Hold the SET button for over 3 seconds anytime when the throttle trigger is at the neutral position (except during the ESC calibration and programming) can factory reset your ESC. RED & GREEN LEDs flash simultaneously indicating you have successfully restored all the default values within your ESC. Once you power the ESC OFF, and then back ON, the settings will be back in the default mode.

LED STATUS

1. During the Start-up Process

- The RED LED flashes rapidly, showing indications that the ESC doesn’t detect any throttle signal or the neutral throttle value stored on your ESC may be different from the current value stored on the transmitter.
- The GREEN LED flashes “Number” times indicating the number of LiPo cells you have connected to the ESC.

2. In Operation

- RED & GREEN LEDs die out when the throttle trigger is in throttle neutral zone.
- The RED LED turns on solid when your vehicle runs forward. The GREEN LED comes on when pulling the throttle trigger to the full (100%) throttle endpoint.
- The RED LED turns on solid when you brake, the GREEN LED will also come on when pushing the throttle trigger to the full brake endpoint and setting the “maximum brake force” to 100%.
- The RED LED turns on solid when you reverse your vehicle.

3. When Some Protection is Activated

- The RED LED flashes a short, single flash and repeats (☆,☆,☆) indicating the low voltage cutoff protection is activated.
- The GREEN LED flashes a short, single flash and repeats (☆,☆,☆) indicating the ESC thermal protection is activated.
- The GREEN LED flashes a short, double flash and repeats (☆☆,☆☆,☆☆) indicating the MOTOR thermal protection is activated.

SIMPLIFIED DECLARATION OF CONFORMITY

MANUFACTURER :

Team Corally hereby declares that the speedcontroller system type **TOROX 185** complies with the Directive 2014/53/EU.
The full text of the EU Declaration of Conformity is available at the following Internet address:
www.corally.com
Team Corally, Geelseweg 80, B-2250 OLEN, Belgium, info@corally.com

TROUBLESHOOTING

Trouble(s)	Possible Causes	Solution
The ESC was unable to start the status LED, the motor, and the cooling fan after it was powered on.	1. No power was supplied to the ESC. 2. The ESC switch was damaged.	1. Check if all ESC & battery connectors have been well soldered or firmly connected. 2. Replace the broken switch.
The ESC was unable to start the motor after it was powered on, but the motor emitted a short, double beep (BB, BB, BB...) that repeats with GREEN LED on the ESC blinked. (The interval between two beeps was 1 second.)	The battery voltage was beyond the normal operating voltage range of the ESC.	Check the battery voltage.
After the ESC was powered on and finished LiPo cells detection (the GREEN LED flashed N times), and then the RED LED flashed rapidly.	1. The ESC didn't detect any throttle signal. 2. The neutral throttle value stored on your ESC is different from the value stored on the transmitter.	1. Check if the throttle wire is reversely plugged in or in the wrong channel and if the transmitter is turned on. 2. Re-calibrate the throttle range after you release the throttle trigger to the neutral position.
The vehicle ran backward when you pulled the throttle trigger towards you.	1. The (ESC-to-motor) wiring order was incorrect. 2. Your chassis is different from popular chassis.	Switch any 2 of the 3 motor wires (ESC-to-motor).
The motor suddenly stopped or significantly reduced the output in operation.	1. The receiver was influenced by some foreign interference. 2. The ESC entered the battery LVC (Low Voltage Cutoff) protection. 3. The ESC entered the thermal (over-heat) protection.	1. Check all devices and try to find out all possible causes, and check the transmitter's battery voltage. 2. The RED LED keeps flashing indicating the LVC protection is activated, please replace your pack. 3. The GREEN LED keeps flashing indicating the thermal protection is activated, please let your ESC cool down before using it again.
The motor stuttered but couldn't start.	1. Some soldering between the motor and the ESC was not good. 2. The ESC was damaged (some MOSFETs were burnt).	1. Check all soldering points, please re-solder if necessary. 2. Contact the distributor for repair or other customer services.
The vehicle run forward (and brake), but could not reverse.	1. The throttle neutral position on your transmitter was actually in the braking zone. 2. Set the "Running Mode" improperly. 3. The ESC was damaged.	1. Re-calibrate the throttle neutral position. No LED on the ESC will come on when the throttle trigger is at the neutral position. 2. Set the "running mode" to "Forward/ Reverse with Brake". 3. Contact the distributor for repair or other customer services.
The car run forward/backward slowly when the throttle trigger is at the neutral position.	1. The neutral position on the transmitter was not stable, so signals were not stable either. 2. The ESC calibration was not proper.	1. Change your transmitter 2. Re-calibrate the throttle range or fine tune the neutral position on the transmitter.
1. The LCD program box kept displaying "CONNECTING ESC" after you connected it to your ESC. 2. The LED program card kept display 3 short lines (- - -) after you connected it to your ESC.	The programming card/box was connected to the ESC via the throttle control cable (Rx cable).	It is wrong to use the Rx cable to connect programming card/box. The programming port of this ESC is also the fan port, so please connect the ESC and programming card/box by plugging the programming cable into the fan port.
When pressing the SET button to set the throttle neutral position, the GREEN LED didn't flash and no beep was emitted, or you were unable to set the full throttle endpoint and the full brake endpoint after the neutral position was accepted.	1. The ESC throttle cable wasn't plugged in the correct channel on the receiver. 2. The ESC throttle cable was reversely plugged in.	1. Plug the throttle cable into the throttle (TH) channel on your receiver. 2. Plug in the throttle cable properly by referring to relevant mark shown on your receiver.

Team Corally • Geelseweg 80 • 2250 Olen • Belgium
Tel: +32 14 25 92 94 • info@corally.com • www.corally.com